Cat® Fusion™ Coupler System

Wheel Loaders

Features:

Improved Machine Performance

- New, patented Wheel Loader interface provides performance virtually identical to pin-on, and all the flexibility of a quick coupler system.
- The Fusion™ coupler sits back, close in to the loader arms — minimizing offset, enabling increased machine performance.

Unsurpassed Durability

- An advanced wedging mechanism creates a tight, rattle-free fit. This patented lock up system eliminates play and wear — resulting in a long service life.

Increased Visibility

- A new, open coupler frame design clears sight lines from the operator's seat, making it easier than ever before to engage and disengage attachments with certainty.

Wide Range of Job Site Solutions

- The Fusion Coupler System work tool assortment gives many abilities and options to a single machine — or a whole fleet of Wheel Loaders — increasing production on the job site.

Common Interface Compatibility

- The Fusion Coupler System gives Caterpillar customers one common interface — eliminating the need for many different couplers across the entire range of small and medium wheel loaders.
- This expanded machine compatibility not only allows one machine to use a range of work tools, but also allows one work tool to be picked up by machines of many different sizes.

Machine Compatibility

- The Fusion interface is designed to work on machines sized from 924 through 972, including IT38 and IT62 loaders.* Each machine will have their own "optimal" bucket and fork recommendations. However, cross-machine compatibility will give our dealers and customers additional options. Fusion delivers flexibility and fleet options that no other coupler can.
- The Fusion Coupler System brings compatibility across the entire range of small and large wheel loaders:

924	930	962	IT38
924z	938	966	IT62
928	950	972	

* The G-Series, H-Series and future Wheel Loaders

CATERPILLAR®

Performance, Durability, Visibility, Flexibility

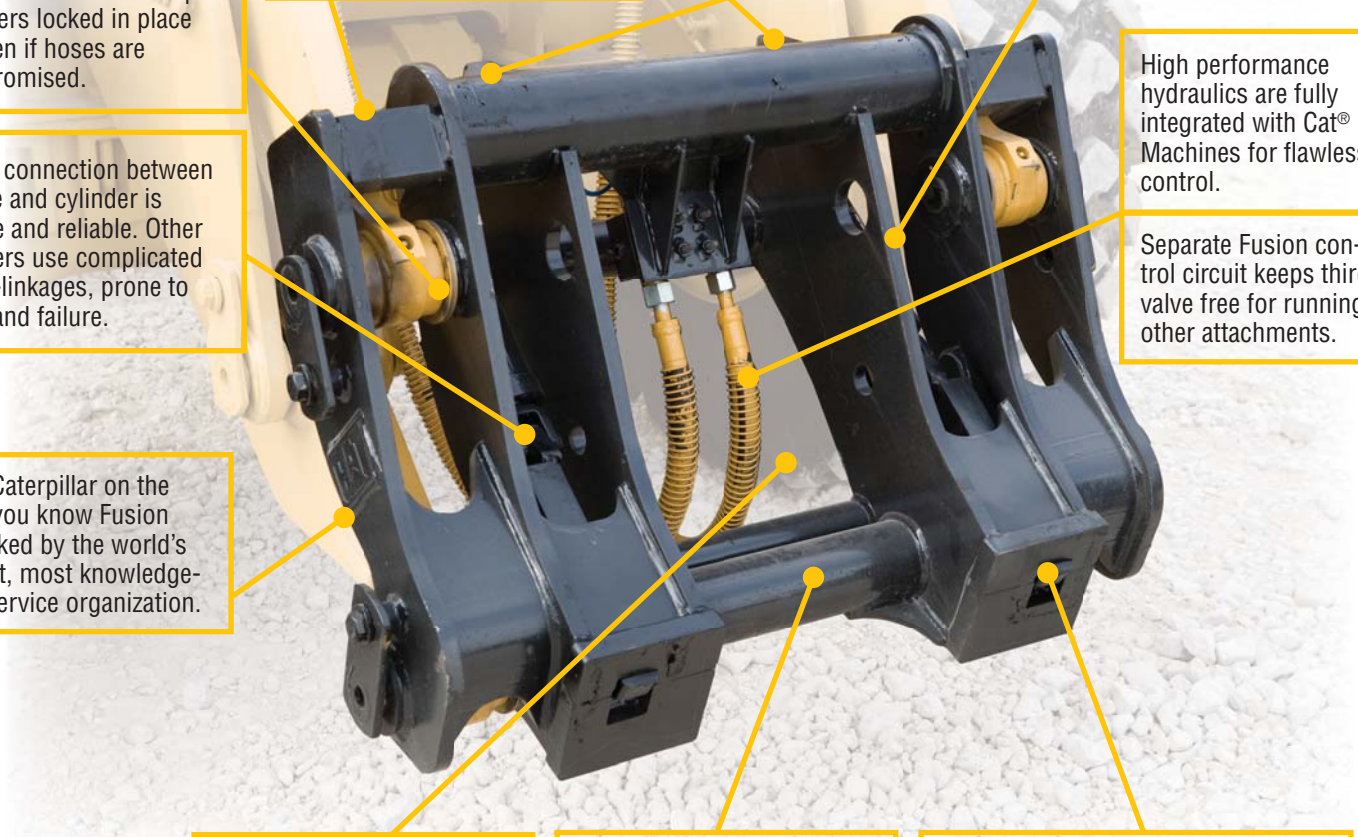

Fusion coupler is integrated into loader arms — minimizing offset, promoting more machine performance.

Alignment indicators enhance ease of use for coupling and uncoupling in ideal and less-than-ideal conditions.

Long-stroke cylinders keep wedges tight for the life of the coupler.

Integral check valve keeps cylinders locked in place — even if hoses are compromised.

High performance hydraulics are fully integrated with Cat® Machines for flawless control.

Direct connection between wedge and cylinder is simple and reliable. Other couplers use complicated cross-linkages, prone to wear and failure.

Separate Fusion control circuit keeps third valve free for running other attachments.

With Caterpillar on the side, you know Fusion is backed by the world's largest, most knowledgeable service organization.

Open frame design promotes better visibility at ground level and truck bed heights.

Constructed of high-strength steels, and assembled to ISO9001 standards, the Fusion coupler endures like no other. Over 30,000 hours of on-the-job testing prove it.

A tight fit is achieved by cylinders driving wedges down and into coupler pockets on the attachment. Tight fit eliminates rattle and premature wear, and substantially increases durability over traditional couplers.

No Loss of Performance

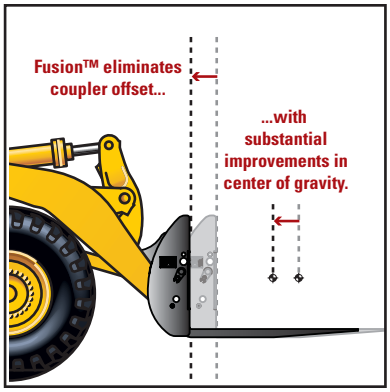

This new, patented interface provides coupler flexibility with performance virtually identical to pin-on.

Imagine lifting a hundred-pound box with your arms fully extended. Now, imagine lifting that same load close to your body. That's the genius of Fusion: designed to integrate the work tool and the machine by pulling the coupler and tool closer to the wheel loader. As a result, the center of gravity is moved inward, towards the machine. This translates to increased lifting ability when compared to machines equipped with competing coupler systems.

Designed for Durability

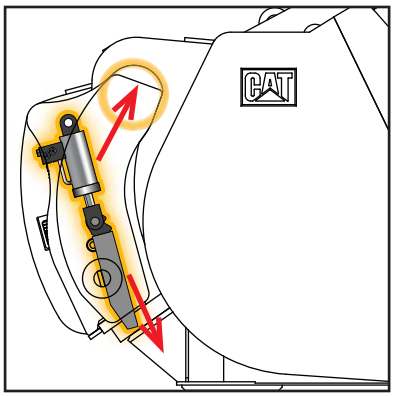

The advanced wedging mechanism of the Fusion Coupler creates a tight, rattle-free fit. This new lock up system eliminates play and wear — resulting in a long service life.

Wedges pull the attachment tight to the machine in two directions — in and down. Constant hydraulic pressure on the coupler wedges compensates for wear, assuring a tight fit throughout the life of the coupler. Tight fit gives better tool control and increased productivity. Plus, coupler durability is substantially increased over traditional couplers.

Increased Visibility

A new, open coupler frame design opens sight lines from the operator's seat, making it easier than ever before to engage and disengage attachments with certainty.

Offset tines and other design changes to Fusion Pallet Forks, working in conjunction with the Fusion Coupler, increase visibility substantially at ground level and truck bed height when compared to traditional coupler and fork combinations.

Compatibility and a Common Interface

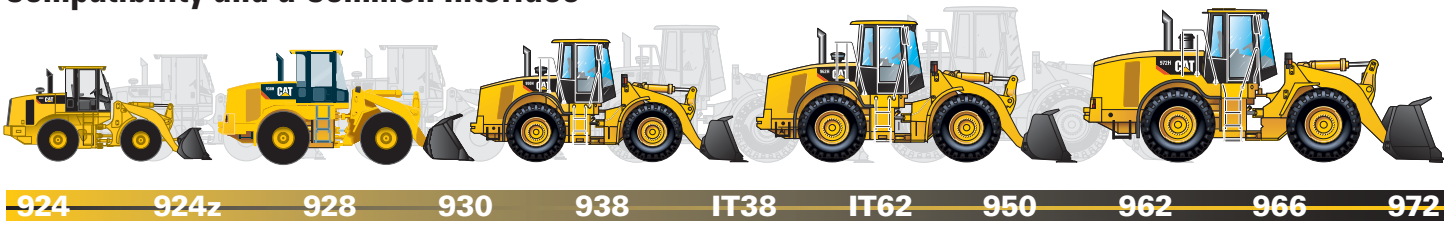

Buckets

The Caterpillar Fusion Coupler System includes a full line of buckets for use in a wide range of job site situations.

Coal/Light Material

Coal Buckets maximize productivity in loading and stockpiling coal and other materials of similar density.

Sizes Available:
- Capacity: 4.75 to 8.25 yd^3 (3.60 to 6.30 m^3)
- Width: 109 to 134 in. (2767 to 3405 mm)

General Purpose

General Purpose Buckets provide good all-around performance for stock-piling, rehandling, excavating and bank loading. A heavy duty general purpose bucket can be used for more aggressive applications.

Sizes Available:
- Capacity: 2.40 to 7.00 yd^3 (1.80 to 5.35 m^3)
- Width: 100 to 136 in. (2540 to 3454 mm)

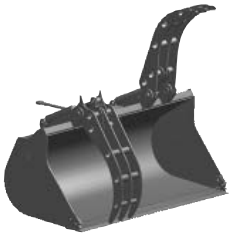

Grapple

Grapple Buckets are key producers in transfer stations, landfills and similar applications.
- Twin top clamps hold down paper, refuse and other loose material. With a top clamp bucket, the loader becomes a versatile material handling machine.

Sizes Available:
- Capacity: 3.00 to 4.25 yd^3 (2.30 to 3.25 m^3)
- Width: 106 to 120 in. (2692 to 3048 mm)

High Dump

High dump buckets utilize dedicated dumping cylinders and a bottom hinge to “roll out” material. This bucket reaches up and over the sides of loading bins and truck sides, higher than ordinary bucket types.

Sizes Available:
- Capacity: 2.80 to 6.50 yd^3 (2.10 to 5.00 m^3)
- Width: 105 to 120 in. (2667 to 3059 mm)

Material Handling

Material Handling Bucket is a flat-floor bucket used for handling stockpiled materials such as aggregates or other easy-to-load materials requiring moderate breakout force.

Sizes Available:
- Capacity: 2.50 to 7.25 yd^3 (1.90 to 5.54 m^3)
- Width: 100 to 136 in. (2540 to 3454 mm)

Buckets

Multi-Purpose

Multi-Purpose Buckets have a unique four-way action that can load, strip top soil, bull doze, clamp pipe or large chunks of concrete, clean up debris, and many other tasks.

Sizes Available:

- Width: 103 to 127 in. (2606 to 3220 mm)

Rock/Spade

Rock Buckets are designed for face or bank loading in mining or quarry applications. The straight-edge rock bucket provides higher breakout force and increased dump clearance. The spade-edge rock bucket offers increased penetration in certain applications.

Sizes Available:

- Capacity: 4.00 to 5.50 yd^3 (3.10 to 4.21 m^3)
- Width: 117 to 137 in. (2969 to 3480 mm)

Side Dump

Side Dump Buckets dump both to the front and to the side of the machine — an advantage when working in tight quarters such as street work, tunnel construction and building levees.

Sizes Available:

- Width: 120 to 145 in. (3048 to 3677 mm)

Waste

Waste Buckets are designed for long life in the harsh world of refuse applications. This high-capacity bucket is well-suited for loading, sorting and other transfer station work.

Sizes Available:

- Width: 129 to 131 in. (3276 to 3328 mm)

Woodchip/Cleanup

Woodchip and Clean-Up Buckets are available for forestry and millyard applications.

Sizes Available:

- Width: 129 to 155 in. (3276 to 3924 mm)

Brooms

Fusion brooms equip Cat Wheel Loaders for clean up on a wide range of job sites, and specialty cleaning tasks.

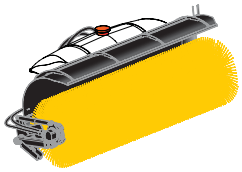

Angle

Cat Angling brooms cast dirt and debris forward or to either side for efficient cleanup. An optional water system controls dust. Ideal for clearing parking lots, industrial plants, millyards, streets, driveways and lanes.

The Special Application Broom is an angle broom with a unique floating suspension and high-strength design. This heavy duty broom is built for use in rugged sweeping situations such as sweeping dirt packed on pavement, coal seams, and sweeping in sewer and pipeline applications.

- Available in 2.5 and 3.0 meter widths.

Pickup

When debris must be contained and not merely swept aside, Pickup Brooms make a clean sweep. An integral hopper captures debris swept up by the rotating broom, for later dumping.

- Available in 2.5 meter width.

Forks

Forks are essential tools on any job site. Unload trucks, place material and load up again.

Pallet

No tools are so indispensable on the job site as pallet forks. Fusion Pallet Forks have an open frame design and offset tines for maximum visibility to the tines. Offset tines and other design changes to Fusion Pallet Forks, working in conjunction with the Fusion Coupler increase visibility substantially at ground level and truck bed height — when compared to traditional coupler and fork combinations.

Fusion pallet forks are designed to meet the needs of varying operator preferences. Forks can be configured to allow the tines to either swing or stay in a fixed position.

Sizes Available:

- 84" carriage with 48", 60" or 72" tines
- 96" carriage with 60", 72", 84" or 96" tines

Log & Lumber

Log and lumber forks utilize flat, pallet-style forks a raised back and optional top clamps to secure and load loose logs or palletized lumber. Single or dual top clamps are available.

Carriages Available:

- 72", 84" and 96" widths

Tines Available:

- 48", 60", 72" and 96" tine lengths

Material Handling Arms

Material Handling Arms precisely place pipe, concrete blocks, highway dividers and other construction materials quickly — with maximum visibility and control. They provide superior performance when compared to chains-on-buckets or other improvised means. With a Material Handling Arm, the operator has full view of the load, job site and other workers. Work is faster and more efficient.

- Available with maximum extended lengths of 187" and 164" (4762 and 4162 mm); retracted lengths of 101" and 127" (2562 and 3238 mm).

Plows

Plows are the perfect choice for road clearing and heavy snow removal.

Angle Plow

Angle plows for the Fusion system cast snow to whichever side needed; angling can be controlled hydraulically, or manually. Multiple widths are available. Some plows also offer a "trip" feature, protecting the plow and machine from impacts with manhole covers, curbs and similar obstacles.

- Available in 12' to 16' widths.

V-Plow

V-plows optimize snow removal operations with a heavy duty steel nose piece and divider to cut aggressively into heavy drifts and break up compacted snow. This plow is the perfect choice for road clearing and heavy snow removal.

- Available in 120" and 126" (3069 and 3234 mm) cutting widths.

Rakes

Loader Rakes are durable, high-capacity tools for land clearing and site clean up. Rakes are available with single or dual top clamps.

- Available in raking widths 84.5" to 124" (2146 to 3150 mm).

For more complete information on Cat products, dealer services, and industry solutions, visit us on the web at **www.cat.com**

GEHQ0185 (05-08)

©2008 Caterpillar
All Rights Reserved
Printed in U.S.A.

Materials and specifications are subject to change without notice. Featured machines in photos may include additional equipment. See your Caterpillar dealer for available options.

CAT, CATERPILLAR, their respective logos, "Caterpillar Yellow," and the POWER EDGE trade dress, as well as corporate and product identity used herein, are trademarks of Caterpillar and may not be used without permission.

CATERPILLAR®